Annex Ii - GV K2 server

1. Description of the installation in Brussels and Strasbourg

- General description of the system

This annex covers the recording equipment on the Grass Valley K2 Server System and all the machines directly connected to it: editing stations (Aurora Edit, Final Cut, Edius), RMI (Removable Media Ingest) stations, low res Aurora editing and browse stations, Carbon Coder encoders (please refer to Annex Ij - Harmonic-Rhozet transcoding system), Protools stations, including the fibre switches, RAID storage and the servers of the system.

The Cisco network equipment of the audiovisual IP network and related maintenance requirements are not covered by this annex, but rather in Annex Il - AV IP Network.

The K2 system of the European Parliament consists of 3 main parts as shown in the diagram below.

1. The main K2 system is located in the JAN building in Brussels.
   It consists out of:

   - the main K2 HD and SD clients
   - K2 raid storage
   - NAS storage
   - K2 servers (File System Managers, FTP servers, and Bridge servers)
   - Aurora servers (DSM, Play out and ingest server, Media frame)
   - proxy encoders
   - Carbon Coder encoders

   A separate standalone K2 HD client located in the Archive system in the JAN building should also be taken into account.

2. A second smaller standalone K2 SAN system is located in the PHS building in Brussels. This system (called EBS server and CRE server) is mainly used for recordings with multichannel audio and delayed playback of these recordings.

   Apart from the former **standalone** system there are Aurora Edit stations, Aurora Play out and Aurora Browse stations connected to the main system in the JAN building.

3. A third system is installed in the LOW building in Strasbourg.
   This K2 SAN system is currently composed of:

   - 5 SD K2-clients
   - K2 servers (FSMs, FTP/Bridge servers)

- K2 Raid storage
- Carbon Coder server for encoding

- 6 Aurora Edit stations
- 1 Edius
- 1 Final Cut station for editing.
- There are also 5 Aurora workstations with Aurora Ingest and Play out software
- 2 RMI (Removable Media Ingest) stations for ingest of the K2-Clients (called EBS server and CRE server) and are mainly used for recordings with multichannel audio and delayed playback of these recordings.

The K2 SAN of Strasbourg is linked to the main system in the JAN building in Brussels (please refer to Annex Il - AV IP Network for more detailed information). Besides the local high res Editing stations in Strasbourg there are Aurora Browse stations for browsing and editing the material on the main system.

The main system is connected to the Archive system covered in Annex Ib - Archive system and the archive documentation system covered in Annex Ic - Archive documentation system - Invenio.

The recording format is IMX50 for SD and XDCAMHD 50Mb/s for HD. DV25 is used for the multi audio recordings on the EBS server and CRE server for Brussels and Strasbourg.

European Parliament

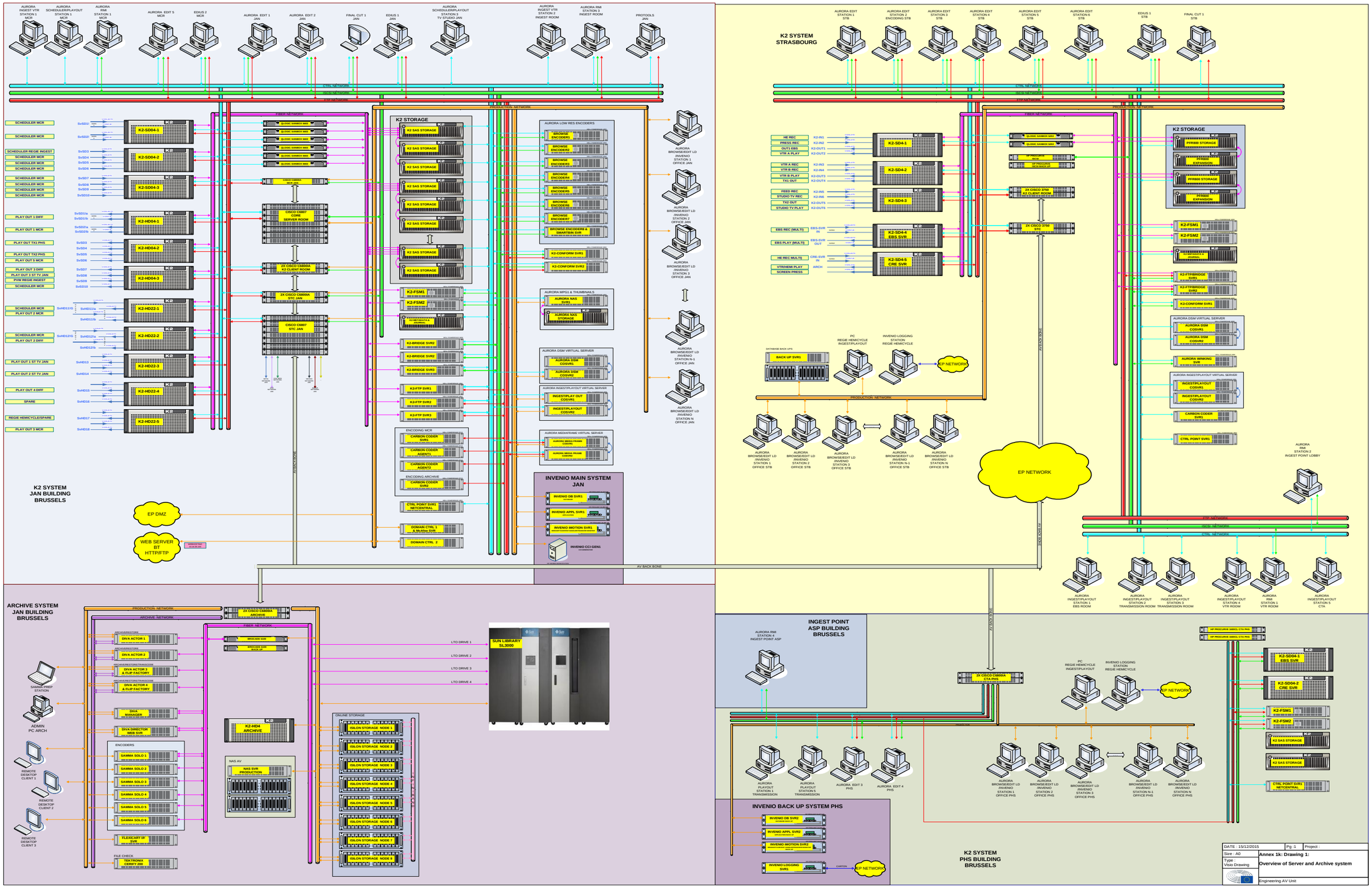

- The list of equipment in Brussels:

K2 SAN JAN building

- 3x K2 SD-04 clients, ganged channel configuration for multi audio channel recording
- 3x K2 HD-04 clients
- 5x K2 HD-22 clients
- Central K2 SAS Storage Raid 6, 27 TB
- 2x K2 File System Manager servers & SAS Storage
- 3x K2 Bridge servers
- 3x K2 FTP servers
- 2x K2 Conform servers
- K2 NAS server & NAS storage 4.3 TB
- Control point pc with GVG Netcentral monitoring software
- 8x Browse Encoding servers

Fiber & network switches

- 6x Fibre switches Qlogic Sanbox 5602

AURORA edit servers

- 2x AURORA DSM server in marathon configuration

AURORA ingest & playback servers

- 2x AURORA INGEST/PLAYBACK server in Marathon configuration

AURORA Browse servers

- 2x AURORA Mediaframe server in Marathon configuration

HiRes edit Stations

- 6x GVG Aurora Edit HDR
- 5x GVG Edius station
- 2x Final Cut Pro station (1x editing; 1x graphic station)
- 3x GVG RMI (Removable Media Ingest) ingest station
- 1x ProTools system

LoRes EDIT & BROWSE stations

- 30 x Aurora Edit LD and Aurora Browse stations

AURORA ingest/playback stations

- 8 x Aurora Ingest Scheduler and Aurora Playback stations

Transcoding

- 3x Carbon Coder servers for MCR and editing
- 1x Carbon Coder server for archive

Standalone K2 client

- 1 x K2 HD-04 Client in Archive

KVM Matrix

- 2x AVOCENT AMX5000

K2 SAN PHS building

- 2x K2-SD-04 clients, ganged channel configuration for multi audio channel recording & playback
- Central K2 SAS Storage Raid 6 TB
- 2x K2 File System Manager servers & SAS Storage
- Control point pc with GV Netcentral SNMP monitoring software

- The list of equipment in Strasbourg:

K2 SAN LOW building

- 3x K2 SD-04 clients
- 2x K2 SD-04 clients, ganged channel configuration for multi audio channel recording
- Central K2 Storage PFR800 Raid 6, 5.2 TB
- 2x K2 File System Manager servers & PFR700 Storage

- 2x K2 Bridge/FTP servers
- 1x K2 Conform server
- Control point pc with GVG Netcentral monitoring software

Fiber & network switches

- 4x Network switches Cisco Catalyst 3750
- 2x Fibre switches Qlogic Sanbox 5602

AURORA edit servers

- 2x AURORA DSM server in Marathon configuration

AURORA ingest & playback servers

- 2x AURORA INGEST/PLAYBACK server in Marathon configuration

AURORA Smart Bin Server

- 1x AURORA Smart Bin Server

HiRres edit stations

- 6x GVG Aurora Edit SDR
- 1x GVG Edius station
- 1x Final Cut Pro station
- 2x GVG RMI (Removable Media Ingest) ingest station

LoRes edit & browse stations

- 6 x Aurora Edit LD and Aurora Browse stations

AURORA ingest/playback stations

- 6 x Aurora Ingest Scheduler and Aurora Playback stations

Transcoding

- 1x Carbon coder server

K2 SAN JAN BUILDING BRUSSELS					
	MACHINE	**QUANTITY**	**HARDWARE VERSION**	**SOFTWARE VERSION**	**OS**
K2					
K2 CLIENTS SAN	K2-SD -04	3	K2-SD -04	K2 version 3.3.2.1401 StorNext File System 3.5.2.1b15620	Windows XP SP3 1GB RAM
	K2-HD -04	3	K2-HD -04	K2 version 3.3.2.1401 StorNext File System 3.5.2.1b15620	Windows XP SP3 1GB RAM
	K2-HD -22	5	K2-HD -22	K2 version 3.3.2.1401 StorNext File System 3.5.2.1b15620	Windows XP SP3 1GB RAM
K2 CLIENT ARCHIVE STANDALONE	K2-HD -04	1	K2-HD -04	K2: 3.2.74.967	Windows XP SP3 1GB RAM
K2 SERVERS	K2 FSM SERVERS	2	Dell PowerEdge 1950	K2 version 3.3.2.1401 StorNext File System 3.5.2.1b15620	Microsoft Windows Server 2003 R2, SP2 2GB RAM
	K2 BRIDGE SERVERS	3	Dell PowerEdge 2950	K2 version 3.3.2.1401 StorNext File System 3.5.2.1b15620	Microsoft Windows Server 2003 R2, SP2 2GB RAM
	K2 FTP SERVERS	3	Dell PowerEdge 1950	K2 version 3.3.2.1401 StorNext File System 3.5.2.1b15620	Microsoft Windows Server 2003 R2, SP2 4GB RAM

	K2 NAS SERVER	1	Dell PowerEdge 1950	K2 version 3.3.2.1401 StorNext File System 3.5.2.1b15620	Microsoft Windows Server 2003 R2, SP2 2GB RAM
	K2 CONFORM SERVERS	2	Dell PowerEdge 2950	Conform Server 7.1.1.330	Microsoft Windows Server 2003, SP2 4GB RAM
	BROWSE ENCODING SERVERS	8	Dell PowerEdge 1950	Aurora Suite 7.1.1.330	Microsoft Windows Server 2003 R2, SP2 2GB RAM
K2 CONTROL POINT	K2 CONTROL POINT	1	Dell PowerEdge 1950	K2 version 3.3.2.1401 NetCentral 5.0.0.53 StorNext File System 3.5.2.1b15620	Microsoft Windows Server 2003, SP2 2GB RAM

AURORA					
AURORA SERVERS	AURORA DSM SERVERS	2	Dell PowerEdge 2950	Aurora News Share 7.1.1.330 Marathon Virtual Server 7.1.1.1200 SP1	Microsoft Windows Server 2003, SP2 4GB RAM
AURORA SERVERS	AURORA INGEST & PLAYBACK SERVERS	2	Dell PowerEdge 2950	Aurora Ingest 7.1.1.93 Aurora Playout 7.1.1.46 Marathon Virtual Server 7.1.1.1200 SP1	Microsoft Windows Server 2003, SP2 4GB RAM
AURORA SERVERS	AURORA BROWSE SERVERS	2	Dell PowerEdge 2950	Aurora Mediaframe: 7.1.1.16 Aurora Browse: 7.1.1.3 Marathon Virtual Server 7.1.1.1200 SP1	Microsoft Windows Server 2003, SP2 4GB RAM
AURORA EDITS	AURORA EDIT HDR	5	HP XW8600	Aurora Edit: 7.1.1.330	Windows XP SP3 3GB RAM
AURORA INGEST/PLAYOUT STATIONS	AURORA RMI	3	Dell TZ5400	Aurora RMI 7.1.1.116	Windows XP SP3 2GB RAM
	AURORA INGEST SCHEDULER/PLAYOUT	8	Dell TZ5400	Aurora Ingest 7.1.1.93 Aurora Playout 7.1.1.46	Windows XP SP3 2GB RAM
EDIUS STATIONS	EDIUS	4	HP XW8600	EDIUS 6.03	
FINAL CUT STATION	FINAL CUT	1			Mac Pro 7
AURORA BROWSE STATIONS		30	Dell Optiplex 960, 7010	Aurora Edit LD 7.1.1.330 Aurora Browse: 7.1.1.3	Windows XP SP3, 2GB RAM, Windows 7 Professional

ENCODING					
CARBON CODER WEB	CARBON CODER SERVER	1	Dell PowerEdge R710	Carbon Coder 3.22.2.44547	Windows Server Longhorn Standard 64bit 8GB
	CARBON CODER AGENT	2	Dell PowerEdge R710	Carbon Coder 3.22.2.44547	Windows Server Longhorn Standard 64bit 8GB
CARBON CODER ARCHIVE	CARBON CODER SERVER	1	Dell PowerEdge R710	Carbon Coder 3.22.2.44547	Windows Server Longhorn Standard 64bit 8GB
AUDIO EDITING					
PROTOOLS STATION	1			Protools HD 8.0.3CS2	Mac Pro 4.1

K2 SAN PHS BUILDING BRUSSELS					
	MACHINE	**QUANTITY**	**HARDWARE VERSION**	**SOFTWARE VERSION**	**OS**
K2					
K2 CLIENTS SAN	K2-SD -04	2	K2-SD -04	K2 system: 3.3.1.1170 StorNext File System: 3.1.2blcrs_3.1.2.RC2525_6138	Windows XP SP3 1GB RAM
K2 SERVERS	K2 SERVERS	2	Dell PowerEdge 1950	K2 system: 3.3.1.1170 StorNext File System: 3.1.2blcrs_3.1.2.RC2525_6138	Microsoft Windows Server 2003 R2, SP2 2GB RAM
K2 CONTROL POINT	K2 CONTROL POINT	1	Dell PowerEdge 1950	K2 system: 3.3.1.1170 StorNext File System: 3.1.2blcrs_3.1.2.RC2525_6138	Microsoft Windows Server 2003, SP2 2GB RAM

K2 SAN LOW BUILDING STRASBOURG					
	MACHINE	**QUANTITY**	**HARDWARE VERSION**	**SOFTWARE VERSION**	**OS**
K2					
K2 CLIENTS SAN	K2-SD -04	5	K2-SD -04	K2 system: 3.3.2.1401 StorNext File System: 3.5.2.1b5620	Windows XP SP3 1GB RAM
K2 SERVERS	K2 FSM SERVERS	2	Dell PowerEdge 1950	K2 system: 3.3.2.1401 StorNext File System: 3.5.2.1b5620	Microsoft Windows Server 2003 R2, SP2 2GB RAM
	K2 BRIDGE/FTP SERVERS	2	Dell PowerEdge 2950	K2 system: 3.3.2.1401 StorNext File System: 3.5.2.1b5620	Microsoft Windows Server 2003 R2, SP2 2GB RAM
	K2 CONFORM SERVERS	1	Dell PowerEdge 2950	Conform Server: 7.1.1.330	Microsoft Windows Server 2003, SP2 4GB RAM
	WINKING SERVER	1	Dell PowerEdge 2950	Auror Suite 7.1.1.330	Microsoft Windows Server 2003 R2, SP2 1GB RAM
K2 CONTROL POINT	K2 CONTROL POINT	1	Dell PowerEdge 850	K2 system: 3.3.2.1401 StorNext File System: 3.5.2.1b5620	Microsoft Windows Server 2003, SP2 2GB RAM
AURORA					
AURORA SERVERS	AURORA DSM SERVERS	2	Dell PowerEdge 2950	Aurora News Share: 7.1.1.330 Marathon Virtual Server 6.1.3100.38 SP.EA	Microsoft Windows Server 2003, SP1, 3GB RAM
AURORA SERVERS	AURORA INGEST & PLAYBACK SERVERS	2	Dell PowerEdge 2950	Aurora Ingest 7.1.1.93 Aurora Playout 7.1.1.46 Marathon Virtual Server 6.1.3100.38 SP.EA	Microsoft Windows Server 2003, SP1, 3GB RAM

EDITS	AURORA EDIT SDR	6	HP XW8600	Aurora Edit: 7.1.1.330	Windows XP SP3, 3GB RAM
	EDIUS	1	HP XW8600	Edius 6.03	Windows XP SP3, 3GB RAM
AURORA INGEST/PLAYOUT STATIONS	AURORA RMI	2	Dell TZ5400	Aurora Ingest 7.1.1.93	Windows XP SP3, 2GB RAM
	AURORA INGEST SCHEDULER/PLAYOUT	5	HP XW8600	Aurora Ingest 7.1.1.93 Aurora Playout 7.1.1.46	Windows XP SP3, 2GB RAM
AURORA BROWSE STATIONS		6	HP Compac 8100 Elite	Aurora Edit LD 7.1.1.330 Aurora Browse: 7.1.1.3	Windows XP SP3, 3GB RAM
ENCODING					
CARBON CODER	CARBON CODER SERVER	1	HP Z800	Carbon Coder 3.22.2.44547	Windows 7 Professional SP1

2. Maintenance of the systems

Any operation requiring all or part of the systems to be taken out of service temporarily must be carried out after the European Parliament has given its specific permission. In view of their nature, these operations might have to be carried out outside the European Parliament's normal working hours.

A data backup will be performed before any major operation.

- Corrective maintenance:

First level support e.g. diagnose of issues, follow up, ticketing, replacement of certain hardware/hardware parts, restarting services, servers... should be done by the onsite maintenance engineers in coordination with the responsible EP engineers as described in Annex I - Technical specifications.

For the purpose of treating operational problems with the system outside of the tenderers competencies, a remote telephone support and VPN intervention should be available with the manufacturer 5 days a week Monday to Friday 9:00 to 17:00.

- Preventive maintenance

For the Brussels and Strasbourg installation a monthly preventive maintenance must be carried out on the entire system by a K2 specialist from the manufacturer (GV) to ensure proper functioning. The maintenance in Brussels will be done **onsite**, whereas for Strasbourg a remote connection from the Brussels network can be used. Nevertheless, quarterly, an **onsite** preventive maintenance is required for the Strasbourg installation (replacing 4 remote maintenance sessions).

The preventive maintenance must include:

- A review of the issues of the preceding month with EP users, EP engineers and maintenance technicians
- Check log files on irregularities on K2 servers, K2 clients
- Check log files on irregularities on Aurora servers: DSM servers, Ingest/Play out servers, Media frame servers
- Check log files on irregularities on Aurora proxy encoders
- Check log files on irregularities on Rhozet Carbon Coder encoders.
- Check log files on irregularities on Aurora Edit, Edius and Final Cut stations.
- Check log files on irregularities on Raid storage, fibre switches.
- Check hard disk storage space on servers and media storage.
- Hardware check of the equipment: check power supplies, disks, or other hardware failures
- Check all processes on memory usage.

- A report of the audit containing a list of all checks performed, clearly listing eventual issues and the solutions put in place to correct them.

This list will be re-evaluated based on the contractors recommendations after contract signature in order to guarantee proper and trouble free system operation.

- Perfective maintenance

For the purpose of perfective maintenance a best effort approach to optimise configurations and workflows will be required.

3. Hardware support

The procedure for the supply of spare parts is described in the document Annex I - Technical Specifications under point 3.3 Repairs and Spare Parts.

4. Service Level Agreement

For the purpose of evaluating criterion 3.1 tenders will include the documents as requested in the Specifications under 15. Award Criteria - §3.1 From the tenderer.

The preventive maintenance as described under §2. Maintenance of the systems - Preventive maintenance is to be counted under module 1.1 of the price schedule.

The price to be quoted under module 2.9 of the price schedule corresponds to the remote telephone support and VPN intervention with the manufacturer 5 days a week Monday to Friday 9:00 to 17:00 as described under §2. Maintenance of the systems - corrective maintenance.